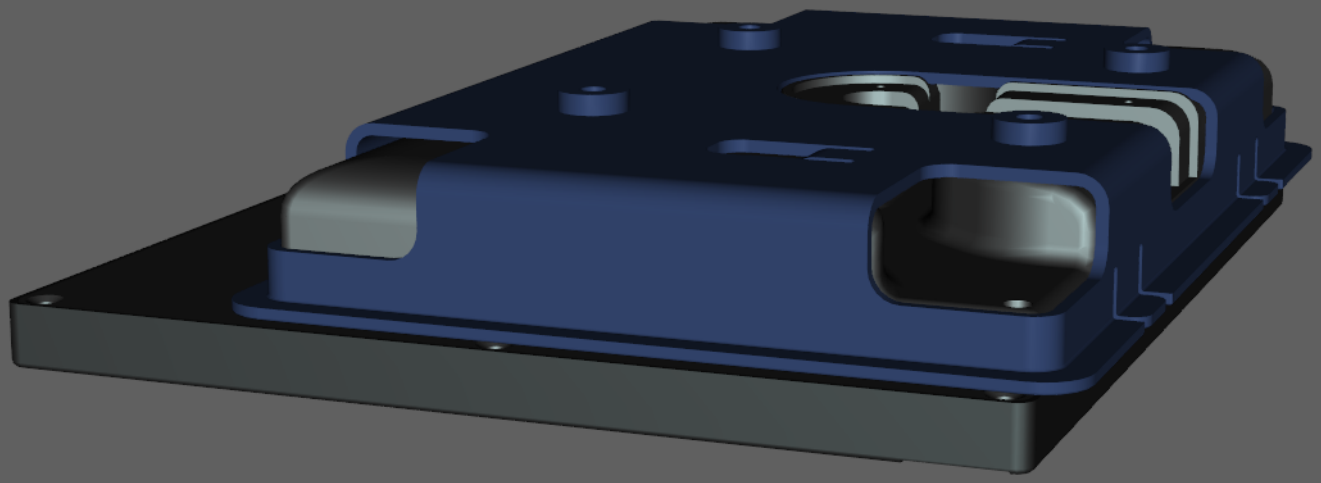

Autodesk

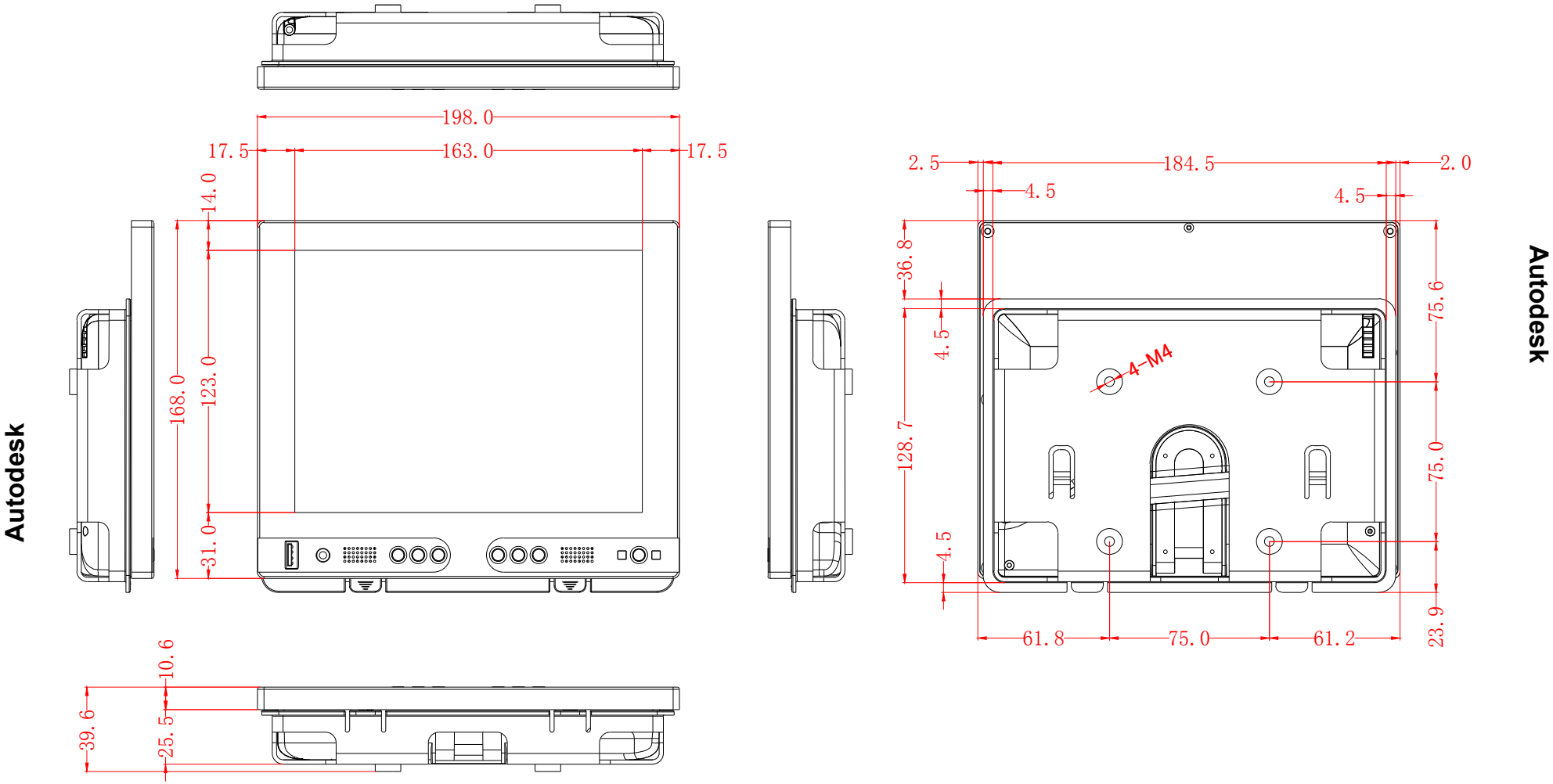

Autodesk

Autodesk

Autodesk