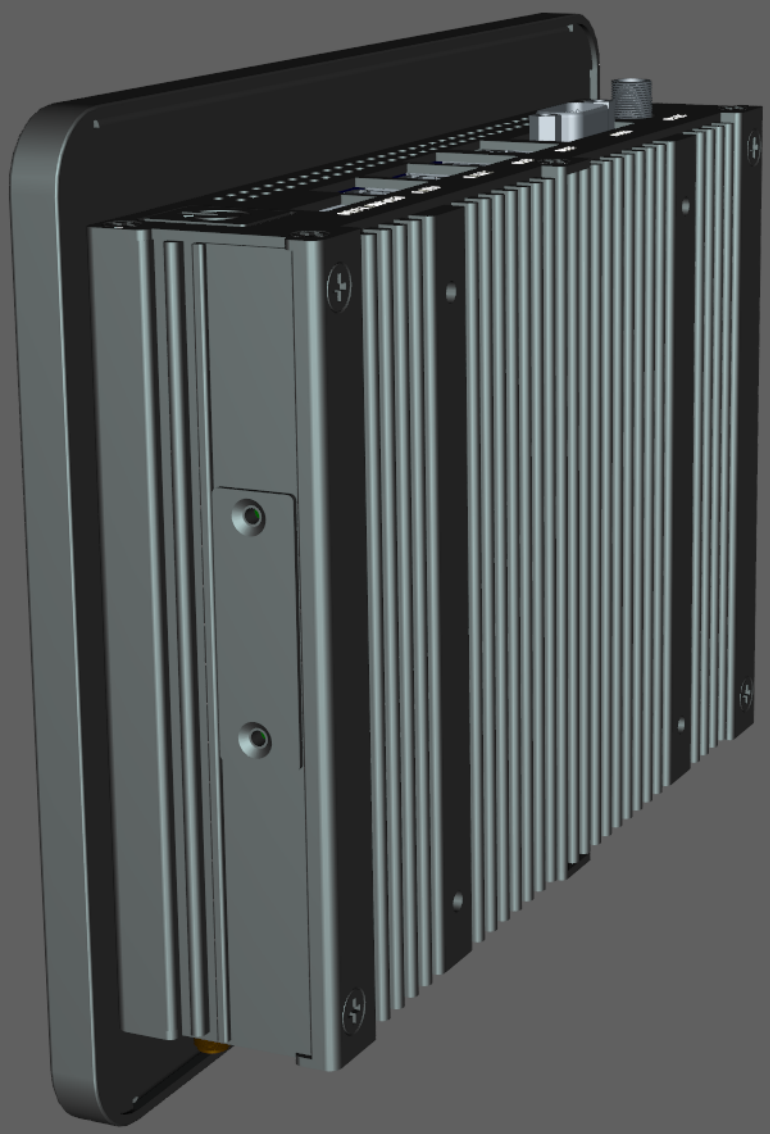

Autodesk

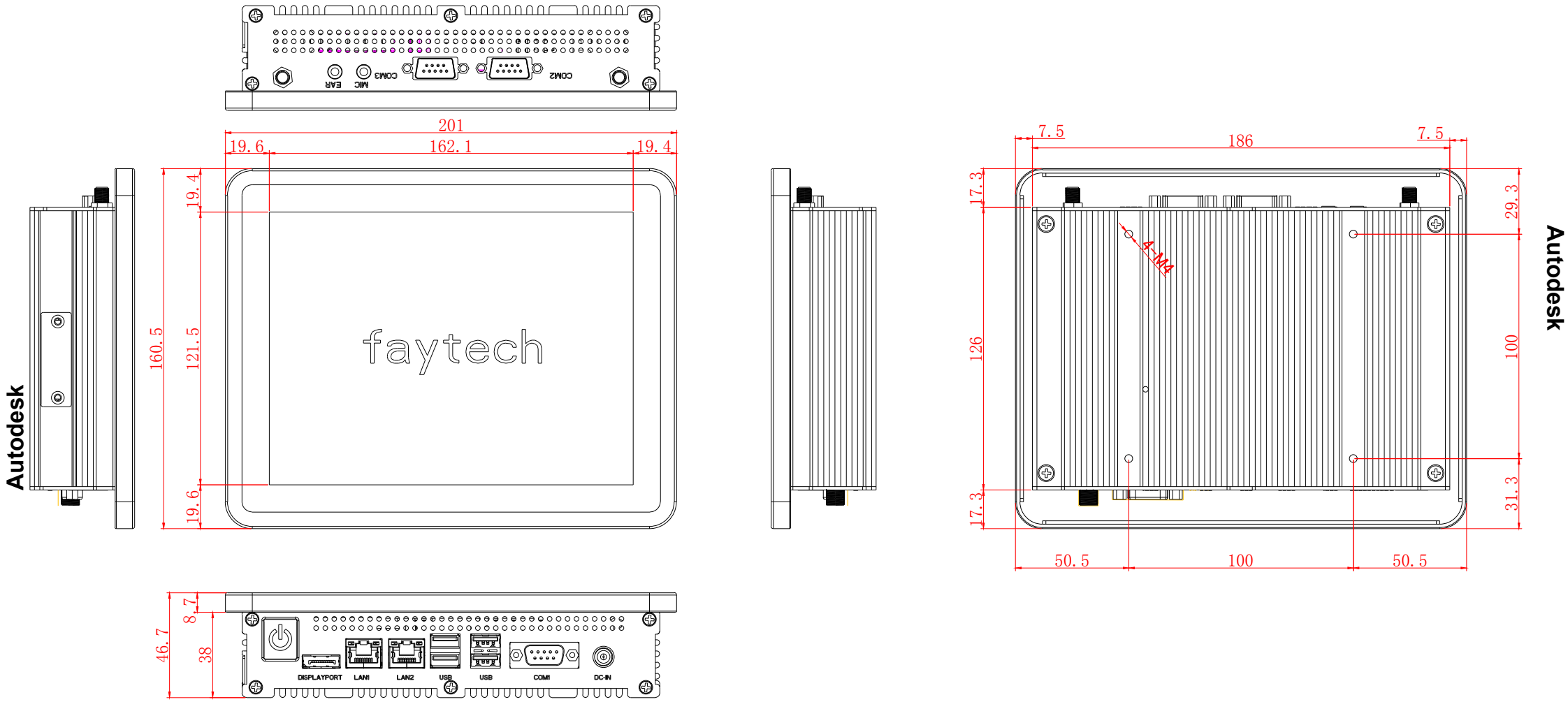

Autodesk

Autodesk